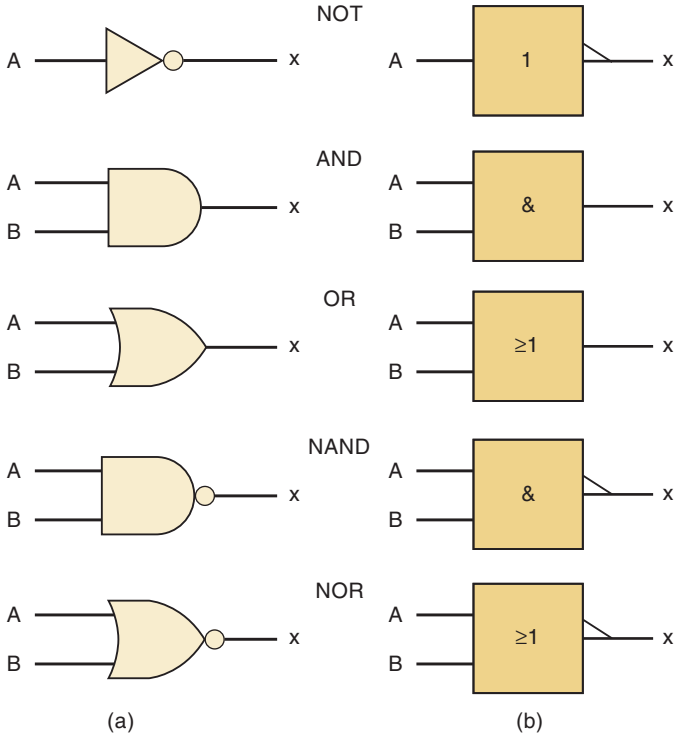FIGURE 3-41 Standard logic symbols: (a) traditional; (b) IEEE/ANSI.